Earless flanged ceramic package; 6 leads **SOT1244C**

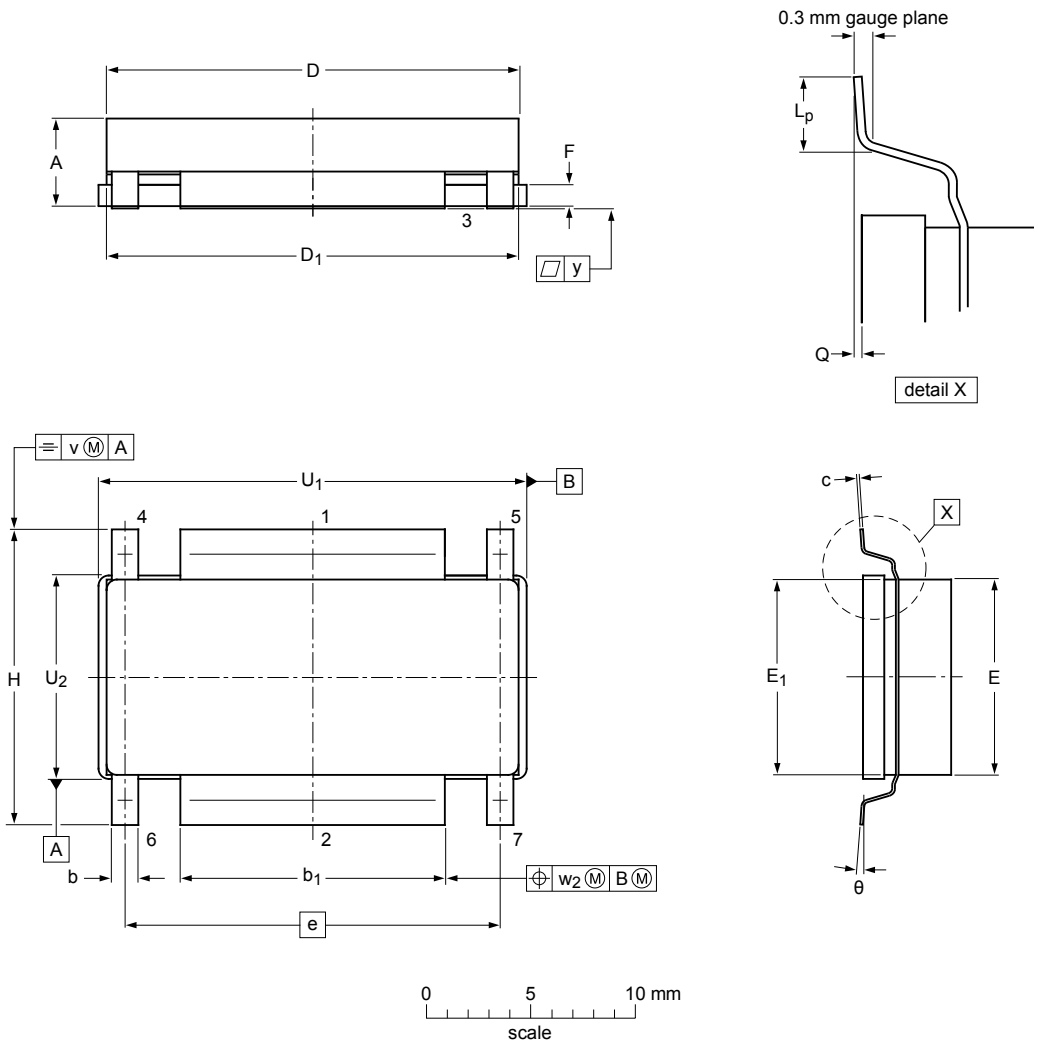

Dimensions

Unit(1)		A	b	b_1	c	D	D_1	e	E	E_1	F	H	L_p	Q	U_1	U_2	v	w_2	y	θ
mm	max	4.75	1.41	12.83	0.18	20.02	19.96		9.53	9.53	1.14	14.3	1.38	0.195	20.70	9.91	0.25	0.25	0.15	7°
	nom							18.03												
	min	3.45	1.14	12.57	0.10	19.61	19.66		9.27	9.27	0.89	14.1	0.98	0.055	20.45	9.65				0°
inches	max	0.187	0.055	0.505	0.007	0.788	0.786		0.375	0.375	0.045	0.563	0.055	0.008	0.815	0.39	0.01	0.01	0.006	7°
	nom							0.710												
	min	0.136	0.045	0.495	0.004	0.772	0.774		0.365	0.365	0.035	0.555	0.039	0.002	0.805	0.38				0°

Note
1. Millimeter dimensions are derived from the original inch dimensions.

sot1244c_po

Outline version	References				European projection	Issue date
	IEC	JEDEC	JEITA			
SOT1244C						~~12-05-09~~ 12-05-10

© 2015 Ampleon B.V.
All rights reserved. Reproduction in whole or in part is prohibited without prior consent of the copyright owner. The information presented in this document does not form part of any quotation or contract, is believed to be accurate and reliable and may be changed without notice. No liability will be accepted by the publisher for any consequence of it's use. Publication thereof does not convey or imply any license under patent- or other industrial or intellectual property rights.

Printed in the Netherlands