Earless Flanged ceramic package; 2 leads **SOT1227B**

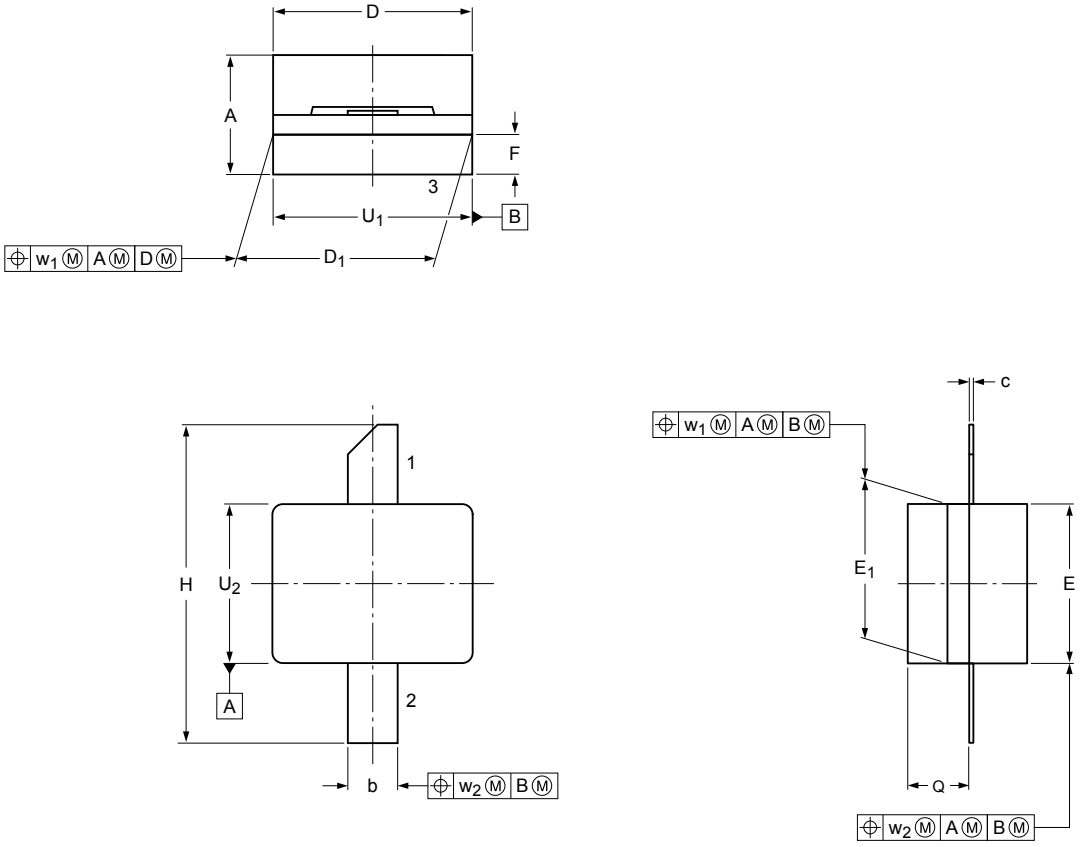

Dimensions

Unit(1)		A	b	c	D	D_1	E	E_1	F	H	Q	U_1	U_2	w_1	w_2
mm	max	3.68	1.40	0.15	5.18	5.21	4.17	4.19	1.07	8.64	1.70	5.21	4.19	0.25	0.380
	nom														
	min	2.84	1.14	0.08	4.98	4.95	3.96	3.94	0.97	7.62	1.45	4.95	3.94		
inches	max	0.145	0.055	0.006	0.204	0.205	0.164	0.165	0.042	0.340	0.067	0.205	0.165	0.01	0.015
	nom														
	min	0.112	0.045	0.003	0.196	0.195	0.156	0.155	0.038	0.300	0.057	0.195	0.155		

Note
1. Millimeter dimensions are derived from the original inch dimensions.

sot1227b_po

Outline version	References				European projection	Issue date
	IEC	JEDEC	JEITA			
SOT1227B						~~12-06-08~~ 13-10-15

© 2015 Ampleon B.V.
All rights reserved. Reproduction in whole or in part is prohibited without prior consent of the copyright owner. The information presented in this document does not form part of any quotation or contract, is believed to be accurate and reliable and may be changed without notice. No liability will be accepted by the publisher for any consequence of it's use. Publication thereof does not convey or imply any license under patent- or other industrial or intellectual property rights.

Printed in the Netherlands